JOB NAME _____

TYPE _____

BIS-RLM SERIES - BLANCA

50-175 watt Metal Halide
35-150 watt High Pressure Sodium
26-60 watt Compact Fluorescent
18 watt LED

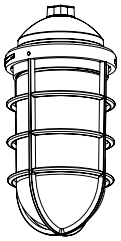

The RLM Series offers unique designs and old standards to enhance the aesthetic appeal of restaurants, retail stores, businesses, and other areas where decorative reflector units are desired.

ORDERING MATRIX

SAMPLE CATALOG NUMBER: BIS100IXX-BLA-GEO-GU-BK

BIS			XX	–	BLA	–		–		–	
FAMILY	WATTAGE	LAMP SOURCE	VOLTAGE		REFLECTOR		GLOBE		GUARD		PAINT COLORS

FAMILY
BIS

LAMP SOURCE
C - Compact Fluorescent
M - Metal Halide
S - High Pressure Sodium
I - Incandescent
L - LED

WATTAGE
035 - 35[23]
050 - 50[5]
070 - 70
100 - 100
150 - 150
175 - 175[1]
200 - 200[96]
26C - 26WCFL[72]
32C - 32WCFL[72]
42C - 42WCFL[72]
57C - 57WCFL[72]
60C - 60WCFL[72]
18W - 18W Neutral White
18A - 18W Amber
18B - 18W Blue
18G - 18W Green
18R - 18W Red

VOLTAGE
XX - Universal

REFLECTOR
BLA - Blanca

GLOBE
Blank - No Globe
GEC - Elongated Clear
GEP - Elongated Prismatic
GES - Elongated Sandblast (standard for LED)
GEO - Elongated Opal
GRO - Round Opal (100W max. incandescent & 26C only)
GFO - Flat Opal (100W max. incandescent only)
GEA - Elongated Amber
GEB - Elongated Blue
GER - Elongated Red
GEG - Elongated Green

GUARD
Blank - No Guard
GU - Guard

PAINT COLORS
WT - White
BK - Black
BZ - Bronze
GY - Gray
AL - Aluminum
GV - Galvanized
SY - Sunflower Yellow
FR - Fire Red
LB - Cornflower Blue
DB - Deep Ocean Blue
FG - Forest Green
GB - Gloss Black
CP - Metallic Copper
BM - Metallic Bronze
NK - Metallic Nickel
GS - Greystone
BS - Brownstone

Footnotes:
[1]Metal Halide only.
[5]DT only.
[23]120V High Pressure Sodium Only.
[72]Compact Fluorescent Only.
[96]Incandescent Only.

General Notes:
All options are factory installed.
Medium base lamp only.
GX24q lamp base for 26-57W compact fluorescent.
2G8 lamp base for 60W compact fluorescent.
All accessories are field installed.

Warning: Refer to and follow the lamp manufacturer's warnings and instructions.

ACCESSORIES (order separately)

For additional descriptions of accessories, refer to sheet numbers DC-47900 and DC-47910.

DIMENSIONS

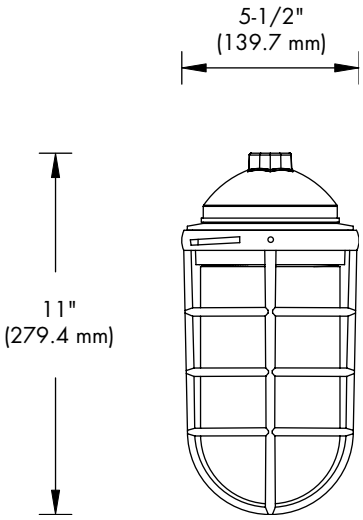

© 2013 Koninklijke Philips Electronics N.V. All rights reserved.
Specifications are subject to change without notice.

PHILIPS
Stonco

PHOTOMETRICS

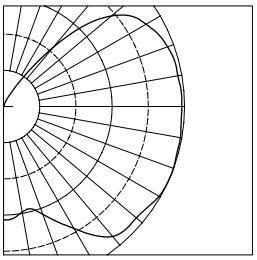

BIS100IXX-BLA-GEP
TEST NUMBER: 26228
LAMP: 100W A19
LUMENS: 1,680
MOUNTING HEIGHT: 12 FEET

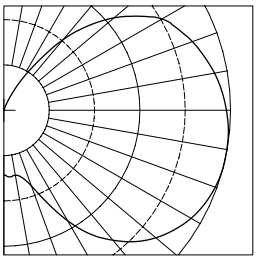

BIS175MXX-BLA-GEP
TEST NUMBER: 26226
LAMP: 175W MH, COATED
LUMENS: 15,000
MOUNTING HEIGHT: 12 FEET

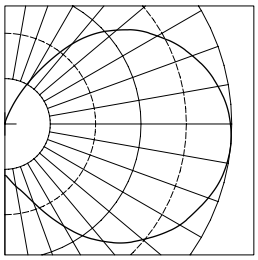

BIS42CCXX-BLA-GEP
TEST NUMBER: 26300
LAMP: 42W CFL
LUMENS: 3,200
MOUNTING HEIGHT: 12 FEET

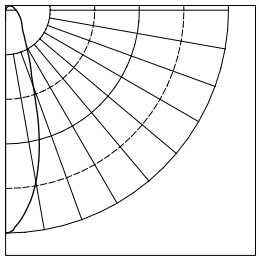

BIS18WLXX-BLA-GES
TEST NUMBER: 27466
LAMP: 18W LED NEUTRAL WHITE
LUMENS: 700
MOUNTING HEIGHT: 12 FEET

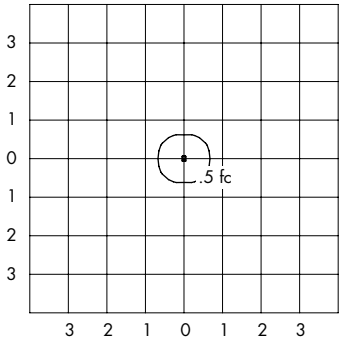

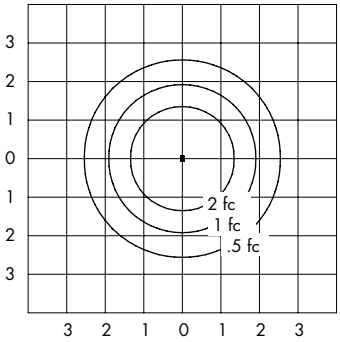

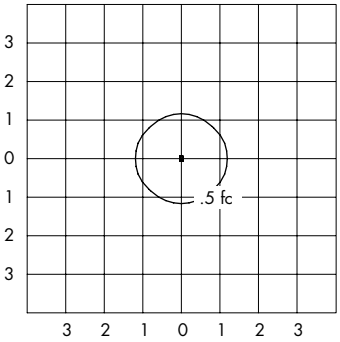

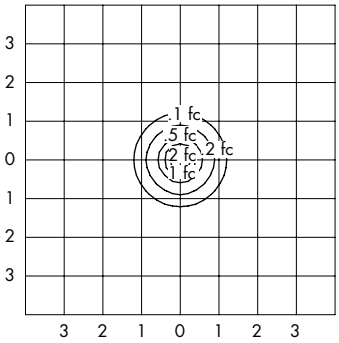

UNITS SHOWN IN TERMS OF MOUNTING HEIGHT
INITIAL FOOTCANDLES SHOWN

PRODUCT FEATURES

UL 1598 Listed for wet location and 25°C ambient for all lamp wattages listed.

1. 1/2" NPT threaded hub for easy, positive mounting.
2. Die cast aluminum pendant mount assembly with polyester powder finish.
3. Optional heat and shock resistant glass optical.
4. Optional die cast aluminum guard with polyester powder finish.

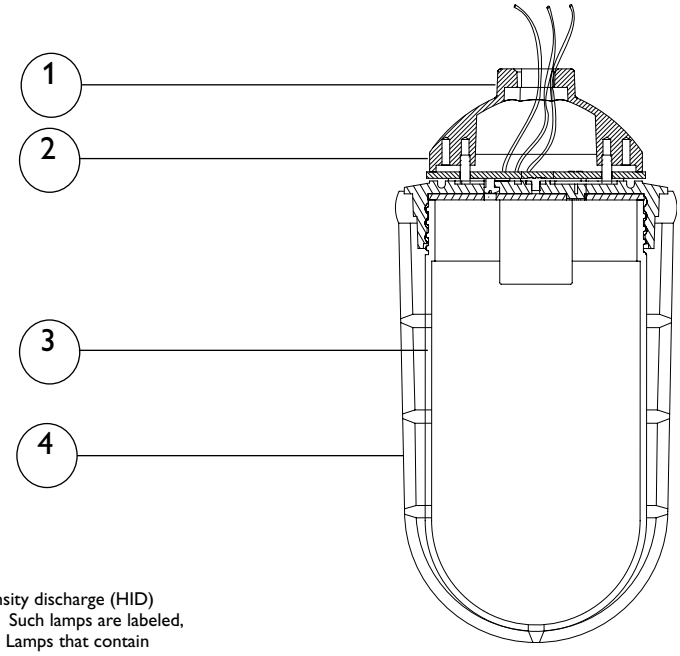

Some luminaires use fluorescent or high intensity discharge (HID) lamps that contain small amounts of mercury. Such lamps are labeled, "Contain Mercury" and/or the symbol "HG". Lamps that contain mercury must be disposed of in accordance with local requirements. Information regarding lamp recycling and disposal can be found at www.lamprecycle.org

© 2013 Koninklijke Philips Electronics N.V. All rights reserved.
Specifications are subject to change without notice.

DC-47150 03/13

Philips Lighting Company
200 Franklin Square Drive
Somerset, NJ 08873
Phone: 855-486-2216
www.philips.com/luminaires

Philips Lighting Company
281 Hillmount Road
Markham ON, Canada L6C 2S3
Phone: 800-668-9008
www.philips.com/luminaires