Day-Brite CFI

by signify

Recessed

SP troffer 1x4

T8, T5, or T5HO

Project:

Location:

Cat.No:

Type:

Lamps: Qty:

Notes:

The Day-Brite / CFI SP troffer is a specification grade recessed lensed luminaire and offers many premium options.

Ordering guide

Example: 1SPG132-FS01-UNV-1/1-EBHHE-LPT835HL

Width	Family	Ceiling Type	No. of Lamps (not included)	Lamp Type	Door Frame	Lens	Door Finish	Voltage
1	SP	G		–	–		–	–
1 1'	**SP** SP Troffer	**G** Grid	**1** **2** **3** (except 54HO)	**28** 28WT5 (46") **32** 32WT8 (48") **54HO** 54WT5HO (46")	**FS** Flat Steel **RA** Regressed Aluminum	**01** Pattern 12 prismatic acrylic **12** K-12, .125" nominal **19** K-19, .156" nominal **21** Pattern 12, .125" nominal **30** 1/2"x1/2"x1/2" silver polystyrene louver **34** 1-1/2"x1-1/2"x1" silver polystyrene louver **52** 3/4"x3/4"x1/2" silver polystyrene louver	**BLANK** White Door **B** Black Door	**120** **277** **347** **UNV** Universal Voltage 120-277V

Options

1/1	One 1-lamp ballast
1/2	One 2-lamp ballast
1/3	One 3-lamp ballast
1/21	2-lamp & 1-lamp ballasts
EB	Electronic ballast, <10% THD, std. ballast factor
EB10R	T8 electronic ballast, program rapid start, <10% THD
EBHE	T8 electronic ballast, high efficiency, std. ballast factor
EBLHE	T8 electronic ballast, high efficiency, low ballast factor
EBHHE	T8 electronic ballast, high efficiency, high ballast factor
EBSD	T8 electronic step dimming ballast, .88 ballast factor
EBD7	Advance Mark 7 dimming ballast, 0-10V (low voltage) control
EBDX	Advance Mark 10 dimming ballast, phase control
EBD	Electronic dimming ballast, customer specified
E1	B100 emerg. ballast, T8, 350-450 lumens, 120/277V
E1CAN	B100-CAN emerg. ballast, Canada market, T8, 350-450 lumens, 120/347V
E7	B60 emerg. ballast, T8, 600-700 lumens, 120/277V
E5	B50 emerg. ballast, U.S. or Canada market, T8, 1100-1400 lumens, UNV
E5CAN	B50-CAN emerg. ballast, Canada market, T8, 1100-1400 lumens, 120/347V
E5ST	B50ST emerg. ballast w/self test, T8, 1100-1400 lumens, UNV
E7LP	LP550 emerg. ballast T5/T5HO, 430-700 lumens, 120/277V
E6LP	LP600 emerg. ballast U.S. or Canada market, T5/T5HO, 750-1325 lumens, 120/277V
F1	3/8" flex, 3 wire 18 gauge 6'
F2	3/8" flex, 4 wire 18 gauge 6'
F2/5W	3/8" flex, 5 wire 18 gauge 6'
GLR	Fusing, fast blow
LPT830	Installed T8/T5/T5HO lamps, 80+ CRI, 3000K
LPT835	Installed T8/T5/T5HO lamps, 80+ CRI, 3500K
LPT841	Installed T8/T5/T5HO lamps, 80+ CRI, 4100K
LPT830HL	Installed T8/T5 hi lumen lamps, 80+ CRI, 3000K
LPT835HL	Installed T8/T5 hi lumen lamps, 80+ CRI, 3500K
LPT841HL	Installed T8/T5 hi lumen lamps, 80+ CRI, 4100K
1W	1-way gasketing, between lens & door frame (not avail. w/RA door)
2W	2-way gasketing, 1W + gasketing between door frame & housing
3W	3-way gasketing, 2W + gasketing for field installation between housing & ceiling
PAF	Housing painted after fabrication

Accessories (order separately)

- **FMA14** 1'x4' "F" mounting frame for NEMA "F" mounting
- **GCP** Grid clip pack (1'x4')

1SP SP troffer recessed 1x4

T5, T5HO, or T8

Construction/Finish

- Specification quality recessed troffer for the following “NEMA” ceiling types: NEMA “G”-Grid, NEMA “NFSG”-Narrow Faced Slot Grid, NEMA “GR”-Grid Regressed, NEMA “NFG”-Narrow Faced Grid, NEMA “F”-Flange.
- Die formed ribbed and embossed steel housing.
- Housing is multi-stage phosphate treated for maximum corrosion resistance and finish coat is high reflectance baked white enamel.
- Access plate (2 K.O.’s) factory installed includes grounding screw.
- T-bar grid clips (UL listed) built into fixture end plates, no extra parts required.

Electrical

- cULus listed for damp locations.
- Self-contained fluorescent emergency power packs can be incorporated. (1 and 2 lamp models only)

Enclosure

- Mitered corner door frames are Flat Steel.
- Hinged and latched (from either side) door frame.
- Mechanically designed interlocks block light, no gaskets are needed.
- Prismatic acrylic pattern 12 lens standard (01). Other lenses or louvers optional.

Ceiling configuration

1 SP G 1 32

Ceiling type

G = Grid (NEMA G)

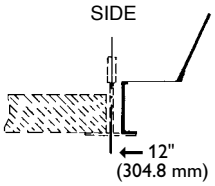

(NEMA Type G)
Lay-in acoustical ceilings using exposed grid suspension, with tees for luminaires on 12" x 48" spacing.

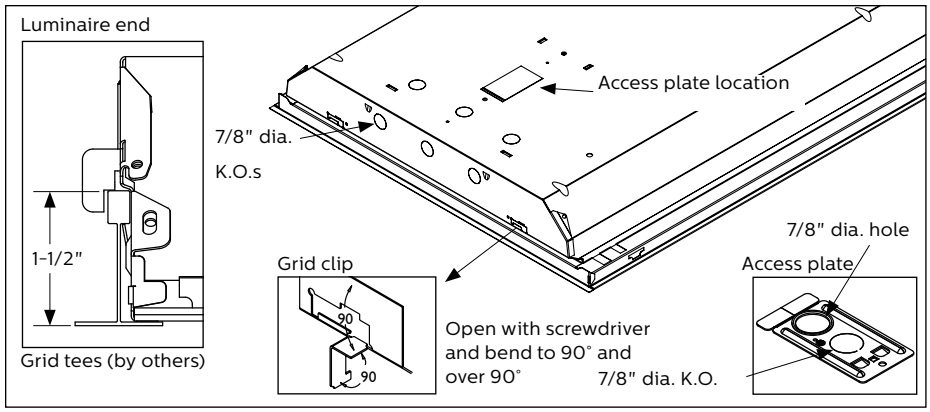

1SP SP Troffer recessed 1x4

T5, T5HO, or T8

Dimensions

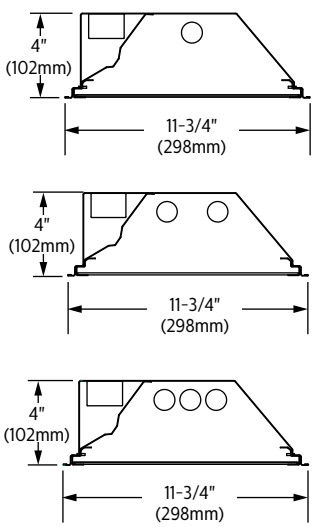

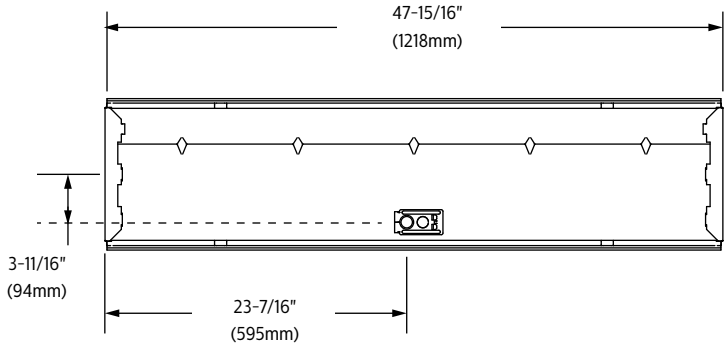

Photometry

SP troffer 1x4 2 Lamp T8 **Efficiency – 69.2%** **LER – 68** **TER – 61**

Catalog No.	1SPG232-FS01
Test No.	33910
S/MH	1.3
Lamp Type	F32T8
Lumens/Lamp	3100
Ballast Factor	.89
Input Watts	56

Comparative yearly lighting energy cost per 1000 lumens – **$3.53** based on 3000 hrs. and $.08 pwr KWH.

The photometric results were obtained in the Day-Brite laboratory which is NVLAP accredited by the National Institute of Standards and Technology.

Candlepower

Angle	End	45	Cross
0	1732	1732	1732
5	1722	1723	1728
15	1668	1677	1679
25	1545	1553	1561
35	1352	1353	1335
45	1080	1039	960
55	715	666	573
65	394	342	309
75	213	159	149
85	99	58	35

Light Distribution

Degrees	Lumens	% Lamp	% Luminaire
0-30	1363	22.0	31.8
0-40	2219	35.8	51.8
0-60	3639	58.7	84.9
0-90	4290	69.2	100

Average Luminance

Angle	End	45°	Cross
45	5170	4977	4596
55	4223	3933	3382
65	3154	2738	2479
75	2788	2077	1951
85	3838	2270	1354

Coefficients of Utilization

Effective Floor Cavity Reflectance 20 Per (Pfc=0.20)

pcc	80			70			50	
pw	70	50	30	70	50	30	50	30
RCR								
0	81	81	81	80	80	80	77	77
1	76	72	69	73	70	68	68	66
2	68	64	59	68	63	58	59	56
3	64	56	52	61	56	51	54	50
4	58	51	45	56	50	45	47	44
5	54	46	40	53	45	40	44	39
6	50	40	35	48	40	34	40	34
7	46	38	32	46	36	32	35	30
8	44	34	28	41	34	28	33	28
9	40	32	26	40	30	26	30	26
10	38	28	23	36	28	23	28	23

Hg

Some luminaires use fluorescent or high intensity discharge (HID) lamps that contain small amounts of mercury. Such lamps are labeled, "Contain Mercury" and/or the symbol "HG". Lamps that contain mercury must be disposed of in accordance with local requirements. Information regarding lamp recycling and disposal can be found at www.lamprecycle.org

1SP SP Troffer recessed 1x4

T5, T5HO, or T8

SP troffer 1x4 3 Lamp T8 **Efficiency – 62.1%** **LER – 62** **TER – 56**

Catalog No.	1SPG332-FS01
Test No.	33911
S/MH	1.2
Lamp Type	F32T8
Lumens/Lamp	3100
Ballast Factor	.83
Input Watts	77

Comparative yearly lighting energy cost per 1000 lumens – **$3.87** based on 3000 hrs. and $.08 pwr KWH.

The photometric results were obtained in the Day-Brite laboratory which is NVLAP accredited by the National Institute of Standards and Technology.

Candlepower

Angle	End	45	Cross
0	2377	2377	2377
5	2364	2366	2368
15	2287	2299	2294
25	2118	2122	2119
35	1844	1835	1788
45	1468	1390	1255
55	970	871	727
65	528	441	392
75	284	207	193
85	132	78	48

Light Distribution

Degrees	Lumens	% Lamp	% Luminaire
0-30	1865	20.1	32.3
0-40	3028	32.6	52.4
0-60	4924	52.9	85.3
0-90	5778	62.1	100

Average Luminance

Angle	End	45°	Cross
45	7030	6656	6010
55	5729	5141	4294
65	4230	3536	3144
75	3711	2704	2519
85	5122	3049	1858

Coefficients of Utilization

Effective Floor Cavity Reflectance 20 Per (Pfc=0.20)

pcc	80			70			50	
pw	70	50	30	70	50	30	50	30
RCR								
0	73	73	73	71	71	71	68	68
1	68	65	63	66	64	61	60	58
2	61	57	54	60	56	53	54	51
3	56	51	46	56	50	46	48	45
4	53	46	40	51	45	40	44	39
5	48	40	35	47	40	35	39	34
6	45	36	32	44	36	32	35	30
7	41	34	28	40	34	28	33	28
8	39	30	26	38	30	26	29	26
9	36	28	23	35	28	23	28	23
10	34	27	22	34	26	22	26	20

signify

©2019 Signify Holding. All rights reserved. This document may be subject to change. No representation or warranty as to the accuracy or completeness of the information included herein is given and any liability for any action in reliance thereon is disclaimed. All trademarks are owned by Signify Holding or their respective owners.

Signify North America Corporation
200 Franklin Square Drive,
Somerset, NJ 08873
Telephone 855-486-2216

Signify Canada Ltd.
281 Hillmount Road,
Markham, ON, Canada L6C 2S3
Telephone 800-668-9008