Are you ready to jump?

JUMP
CANTILEVER ASYMMETRIC FLUORESCENT

DIRECT ASYMMETRIC, RIBBED MESOOPTICS LENS - PIXELPERF
1L T8

Project:

Spec Type:

Catalog No: 1238T10QP

Qty

Line Notes:

Ordering guide

Product Type	Source	Lamp Count	Lower Optics	Upper Optics	Run Length	Wiring †	Voltage	Driver	Finish
1238	T	10	Q	P					
Jump Asymmetric	T T8 F T5 H T5HO	1 1 Lamp down	Q MesoOptics Lens	E No Perf P PixelPerf S SplashPerf	04 4' 08 8' XX Total run length (4' increments)	1 1 cct 3 1 cct w/ EM cct 5 1 cct w/ BP 7 1 cct w/ Dimming 8 1 cct w/ TW B 2 cct A/B	1 120V 2 277V 3 347V	E Standard	W Standard White T Titanium Silver B Black X Custom

† Consult website for complete list of standard wiring options

Mounting Hardware

Cantilever — Mount Type
Consult separate mounting spec sheet for mount type options

Endcaps - .

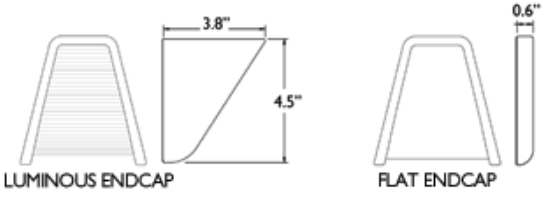

Integrated Controls Please indicate with check mark.

No Options Available

Source Options Please indicate with check mark.

☐ Lamps Supplied

© 2014 Koninklijke Philips N.V. All rights reserved.
Specifications are subject to change without notice.
www.philips.com

PHILIPS LEDALITE

DIRECT ASYMMETRIC, RIBBED MESOOPTICS LENS - PIXELPERF

Photometry

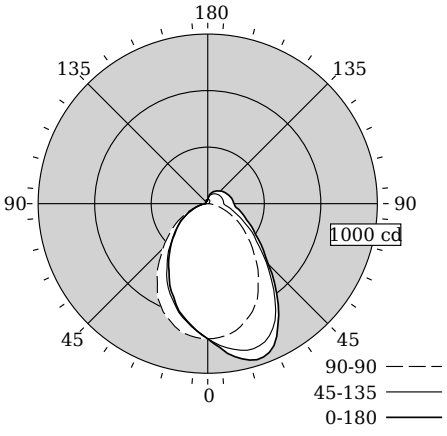

13% Up / 87% Down

Total Output	2087 lm
Efficacy	66.8 lm/W
Efficiency	70.7%
Lamp Type	1x 32W T8 835 Fluorescent
Rated Lamp Output	2950 lm
Distribution	13% Up / 87% Down
Spacing Criteria (0/90/180°)	1.40/1.13/0.92

Values per 4ft unit

Fixture photometry has been laboratory tested in accordance with IESNA LM-41:1998.

IES files for this and other photometric options can be downloaded online at www.lightingproducts.philips.com.

Candela Distribution

Vertical Angle	Horizontal Angle 0	45	90	135	180	Zonal Lumens
0	797	797	797	797	797	0
5	853	840	792	753	751	76
15	955	895	750	662	655	218
25	924	860	659	550	530	317
35	725	691	521	416	401	336
45	504	488	374	295	292	297
55	363	336	254	202	206	236
65	269	225	146	122	129	168
75	207	151	68	57	64	108
85	162	104	17	18	25	64
90	155	95	2	7	10	0
95	151	94	3	6	10	50
105	141	92	7	8	12	48
115	129	89	10	9	14	45
125	119	85	13	11	16	39
135	105	78	17	12	16	32
145	92	71	21	13	16	25
155	78	62	24	14	17	17
165	60	51	25	14	15	9
175	36	33	25	20	18	3
180	24	24	24	24	24	0

Coefficients of Utilization (%)

RCR	Ceiling:	80				70			50		0
	Wall:	70	50	30	10	70	50	30	50	30	10	0
0		82	82	82	82	79	79	79	74	74	74	62
1		75	72	69	66	72	69	67	65	62	60	52
2		69	63	58	55	66	61	57	57	54	51	44
3		63	56	50	46	60	54	49	51	47	43	38
4		58	50	44	40	56	48	43	46	41	37	33
5		54	45	39	35	51	44	38	41	36	33	29
6		50	41	35	31	48	40	34	37	33	29	26
7		46	37	31	27	44	36	31	34	29	26	23
8		43	34	28	24	42	33	28	32	27	23	21
9		40	31	26	22	39	31	25	29	24	21	19
10		38	29	24	20	37	28	23	27	23	19	17

Avg. Luminance (cd/m2)

Vertical Angle	Horizontal Angle 0	90	180
55	3125	3584	1769
65	2585	2735	1237
75	2337	1944	729
85	2305	1119	352

Electrical Specifications

Input Voltage	120V
Input Power	27.5W
Tested values – contact technical support for rated values. Off-state power zero unless certain controls are specified.	

© 2014 Koninklijke Philips N.V. All rights reserved.
Specifications are subject to change without notice.
www.philips.com/luminaires

DIRECT ASYMMETRIC, RIBBED MESOOPTICS LENS - PIXELPERF

Options and Details

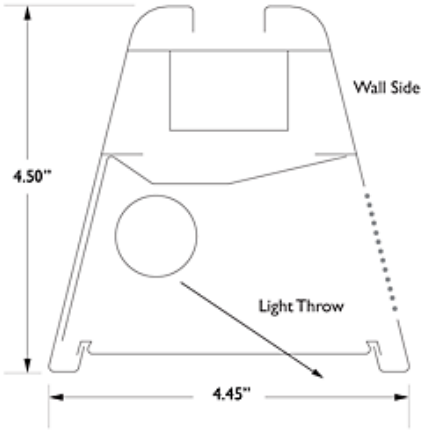

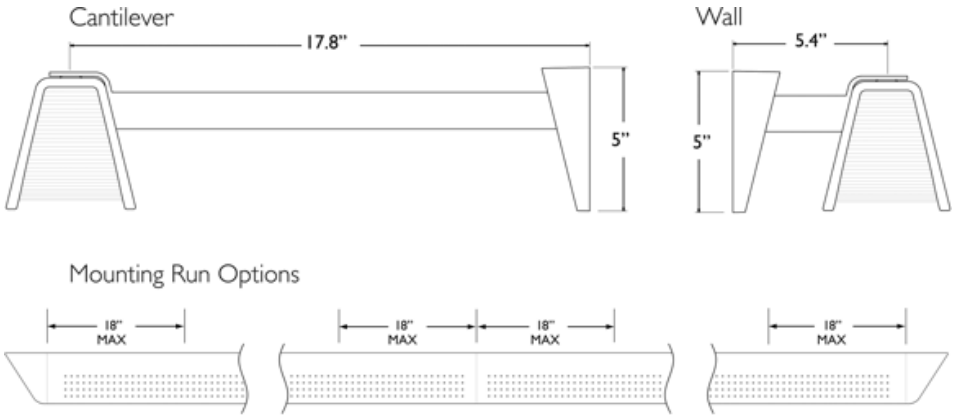

Upper Optics

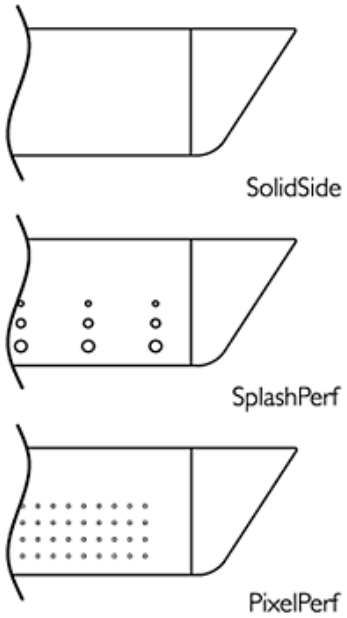

Housing

20 gauge cold-rolled steel precision formed and welded with optional perforated patterns.

Weight

Maximum 3.5lb/ft.

Optical System

Light from the lamps is channeled through the optical lens assembly by Miro Silver reflectors. The optical lens assembly consists of an acrylic extrusion with a ribbed profile holding a layer of MesoOptics film. MesoOptics homogenizes the light and color to ensure consistency while controlling high angle glare and creating an optical batwing distribution.

Standard Ballast

Electronic programmed start.

Mounting

Variable position mounts are supplied for each joint and end. The mounts can be installed up to 18" from joints and end locations. Tamper-resistant aircraft cable grippers provide infinite vertical adjustment capability. Aircraft cable, crimp and cable gripper are independently tested to meet stringent safety requirements.

Joints

Self-aligning joining system with hands-free pre-joining wire access.

Endcaps

Endcaps are diecast aluminum, available in luminous sculpted (standard) or flat (optional).

Electrical

Factory pre-wired to section ends with quick-wire connectors.

Approvals

Certified to UL, CSA and IES standards.

Finish

High quality powder coated, available in matte white, black or titanium silver. Other factory and custom colors available on request.

Environment

Rated for dry or damp locations in operating ambient temperatures 0-40°C (32-104°F). Certain luminaire components may be adversely affected by contaminants. Damage caused by sulfur, chlorine, petroleum based solutions or other contaminants are not covered under warranty.

Due to continuing product improvements, Philips Ledalite reserves the right to change the specifications without notice.

©2014 Koninklijke Philips N.V. All rights reserved.
Specifications are subject to change without notice.
www.philips.com/luminaires

Philips Lighting
North America Corporation
200 Franklin Square Drive
Somerset, NJ 08873
Phone: 855-486-2216

Philips Lighting Company
281 Hillmount Road
Markham ON, Canada L6C 2S3
Phone: 800-668-9008