LightGuard

Type No. _____
Job Name _____
Catalog No. _____

Shown: ER62J96

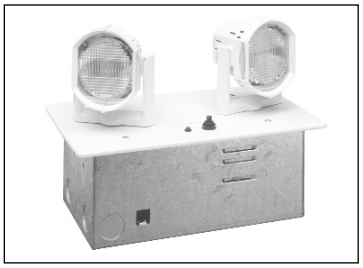

Shown: ER6N142H76W

ER6/ER12 Series

- **Low Profile Commercial Recessed Emergency Unit**
- **6 Volt, 14-28 Watts**
- **Sealed Lead Calcium or Nickel Cadmium Battery**
- **12 Volt, 50-75 Watts**

Housing
- 20 gauge galvanized steel backbox with ½" conduit knockouts
- UL 94 V-0, 5 VA impact resistant white thermoplastic faceplate (6 V units only)
- 12 V units utilize a 12 gauge steel trim plate and is powder-coated in white or black
- May be wall or ceiling mounted - optional bar hanger kit for suspended ceilings

Application
- Ideal for industrial and commercial locations where a self-contained recessed emergency lighting unit is desired
- The ER6/ER12 Series meets the Buy American requirements

Electronics
- 120/277 VAC dual voltage input capability
- Lead calcium units utilize a solid-state, fully automatic, voltage regulated charger
- Nickel cadmium units utilize a solid-state, constant voltage charger
- Includes low voltage disconnect (LVD), AC lockout, brownout protection, AC indicator lamp and test switch

Electrical Specifications
- 120 VAC - 0.07 A, 7.3 W
- 277 VAC - 0.03 A, 7.3 W

Warranty
- Electronics: 3 years
- Battery: 1 year full, 4 years pro-rata (lead calcium)
- Battery: 5 years full, 5 years pro-rata (nickel cadmium)

Battery
- Choice of maintenance free, sealed lead calcium or maintenance free, sealed nickel cadmium batteries
- Lead calcium battery has an expected service life of 5 years with an operating range of 65°F (19°C) to 85°F (30°C)*
- Nickel cadmium battery has an expected service life of 10 years with an operating range of 20°F (-7°C) to 95°F (35°C)*
- Nickel cadmium batteries are ideal for high ambient temperature areas

* Increases or decreases in temperature will affect battery performance and/or capacity. Optimum battery performance realized at 77°F (25°C)

Code Compliance
- UL 924 listed
- NFPA 101, NEC, BOCA, OSHA, and IBC illumination standards
- Optional damp location listing (12 V, 50 W models only) 10°C to 40°C

Dimensions

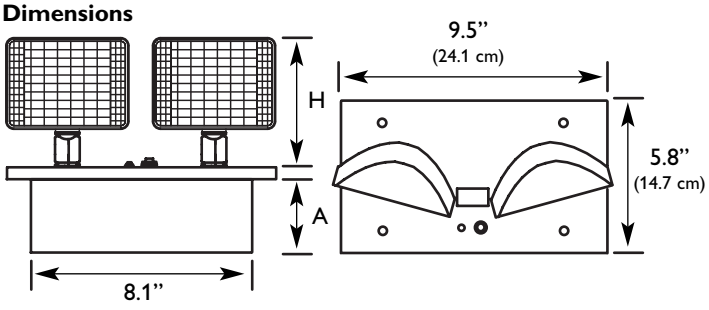

H

Lamp Head	Height (H)
H	3.5" (8.9 cm)
D	6.0" (15.2 cm)
J	5.0" (12.7 cm)

A

ER6	ER12
3.4" (8.6 cm)	5.6" (14.2 cm)

Ordering Information

CATALOG NO.	# OF HEADS	LAMP HEADS	OPTIONS
Lead Calcium Units **ER6** = 6 V, 18 W Unit **ER625** = 6 V, 25 W Unit **ER1250** = 12 V, 50 W Unit **ER1275** = 12 V, 75 W Unit **Nickel Cadmium Units** **ER6N14** = 6 V, 14 W Unit **ER6N28** = 6 V, 28 W Unit	**2** = Two **1** = One	**Wedge Base** **J66** = 6 V, 5.4 W **J76** = 6 V, 7.2 W **J96** = 6 V, 9.0 W **J912** = 12 V, 9.0 W **J1212** = 12 V, 12.5 W **J1812** = 12 V, 18.0 W **"H" Head** **H76W** = 6 V, 7.0 W **H126W** = 6 V, 12.0 W **H1212W** = 12 V, 12.0 W Other lamp heads available, consult factory or refer to lamp heads page.	**A** = Ammeter **DL** = Damp Location[1] **V** = Voltmeter[2] **TD** = Time Delay **W** = White Trim Plate **B** = Black Trim Plate[3]

ACCESSORIES (Ordered Separately)
BHK1 = Bar Hanger Kit **WG8** = Wire Guard **PVS** = Polycarbonate Vandal Shield

NOTES:
1) ER1250 units only.
2) Not available with ER6N28.
3) 12 V units only

Optics

Wall mounted 10' AFF, 'J1212' 12 V 12 W Tungsten Lamps Represented

1 FC Average

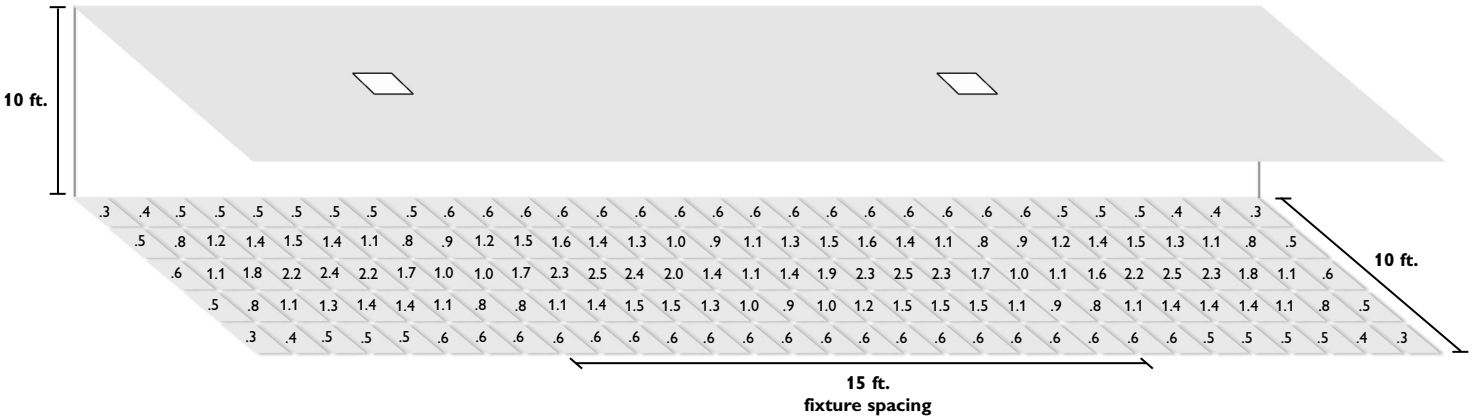

Average initial footcandles at floor = 1.07
Maximum initial footcandles at floor = 2.5
Minimum initial footcandles at floor = 0.5
Maximum to minimum ratio = 5.00

* The optics layout shown is intended to be used as reference only. Standard reflectances used were 80/50/20. LightGuard is not responsible for site specific conditions that may alter the results.

Suggested Specification

Furnish and install LightGuard's ER6/ER12 Series model _____. The emergency lighting unit shall be listed to Underwriters Laboratories, Inc. Standard #924 and shall meet the standards of the National Electrical Code.
OPERATION - Upon failure or brownout of utility power, the units shall automatically transfer to battery power and maintain the required illumination for a period of 90 minutes. Upon restoration of utility power, the charger shall restore the battery to full charge per UL 924 standard requirements.
CHARGER - Sealed lead calcium battery units shall be equipped with a solid-state, constant voltage charger. Nickel cadmium units shall be equipped with a solid-state constant current charger.
BATTERY - The battery shall be either maintenance-free, sealed lead calcium or sealed nickel cadmium.
HOUSING - 6 V units shall have a UL 94 V-0, 5 VA impact-resistant white thermoplastic face plate. 12 V units shall have a 12 gauge steel trim plate with a durable powder-coat finish. The recessed backbox shall be constructed of 20 gauge galvanized steel. The unit shall be capable of being wall or ceiling mounted.

ALL SPECIFICATIONS SUBJECT TO CHANGE WITHOUT NOTICE

LightGuard
272 West Stag Park Service Road • Burgaw, NC 28425
(910) 259-1131 • FAX (800) 403-6927
www.lightguard.com