Wall Wash Cylinder PAR30

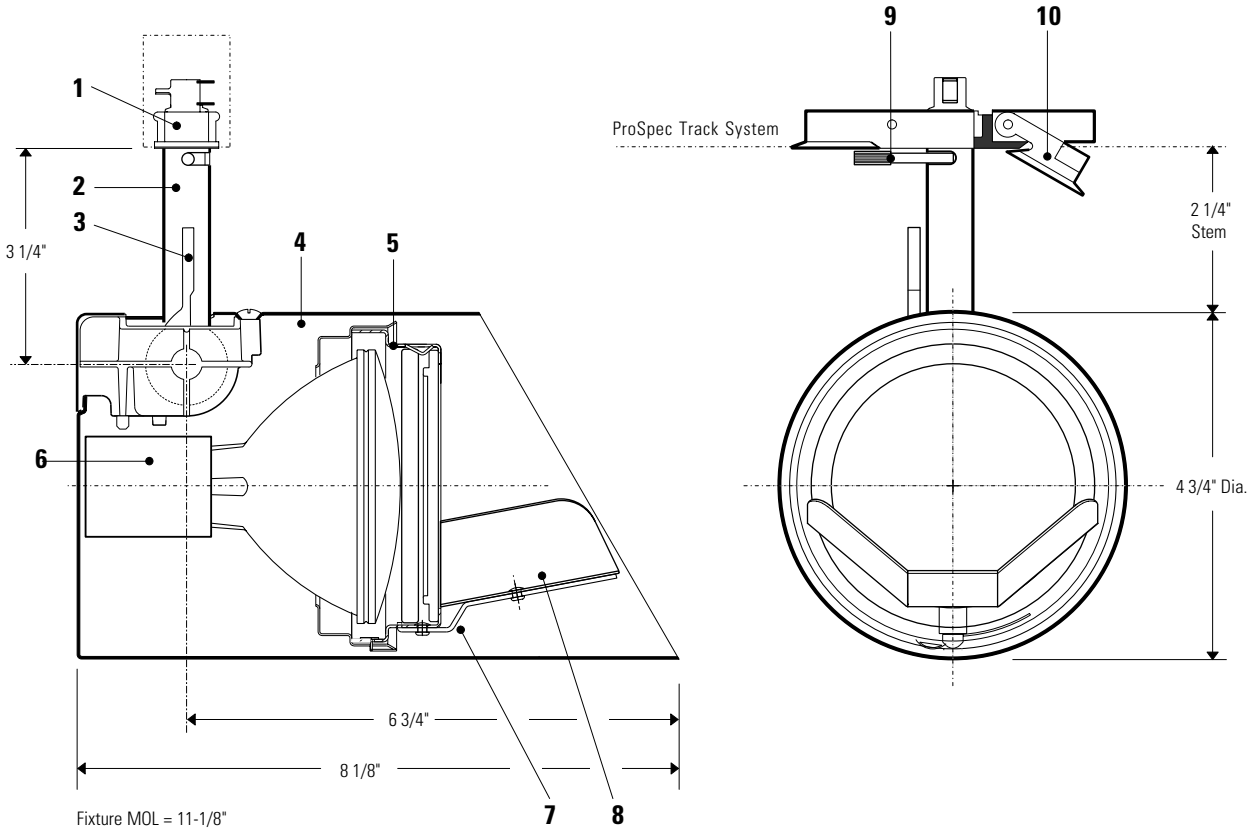

Ordering Information

Catalog No.	Finishes	Mountings	Lamps
26030W WH	Matte White	ProSpec™ Track System	PAR30 75W Max..
26030W BK	Matte Black		

Features

1. **Track attachment fitting:** die-cast aluminum with separate mechanical and electrical functions. Fitting cannot be engaged or disengaged while fixture is powered. Polarity is not a concern with ProSpec track because of its symmetrical positioning of circuits within the track, adapters are reversed to access one or the other circuits.
2. **Stem:** 5/8" O.D. .049" wall, stainless steel.
3. **Locking feature:** die-cast aluminum mechanism permits the locking of the horizontal and vertical positions simultaneously by clamping jaws. When the stainless steel braking lever is released, the horizontal and vertical functions remain fully tensioned to hold aiming positions. Adjustment range is: Horizontal 0-340°; Vertical 0° (NADIR) - 90°.
4. **Housing:** 20 ga. (.036) steel.
5. **Lamp and accessory support:** .032 steel, flared for easy entry of accessory cartridge, matte black finish.
6. **Lampholder:** porcelain, medium base, nickel plated screw shell, #18 ga. braided SF-1 leads..
7. **Kick reflector assembly:** holds one accessory behind the spread lens; example: color filter, UV filter, Heat filter. Assembly is removable from front using a twist and lock motion.
8. **Kick Reflector:** embossed texture anodized aluminum; reflects light towards upper portion of wall and ceiling line
9. **Lever:** Energizes fixture electrically by 90° rotation.
10. **Clamping tabs:** expands or releases gripper springs from track ledge; gripper springs hold attachment fitting securely within track.

Finish

All painted finishes are powder coated baked enamel.

Options & Accessories

Accessories: 3 3/4"dia. series. Filters, lenses, screens and louvers.

Electrical

Electrical components: Polycarbonate moldings.
Contacts: Heavy gauge 1/2 hard brass developed for Lightolier's "U" shaped track conductors.

Labels

UL, I.B.E.W.

Job Information **Type:**

Job Name:

Cat. No.:

Lamp(s):

Notes:

Lightolier a Genlyte Thomas Company www.lightolier.com
631 Airport Road, Fall River, MA 02720 • (508) 679-8131 • Fax (508) 674-4710
We reserve the right to change details of design, materials and finish.
© 2002 Genlyte Thomas Group LLC (Lightolier Division) • A0902

LIGHTOLIER®

Lighting Data

FOOTCANDLES ON WALL:

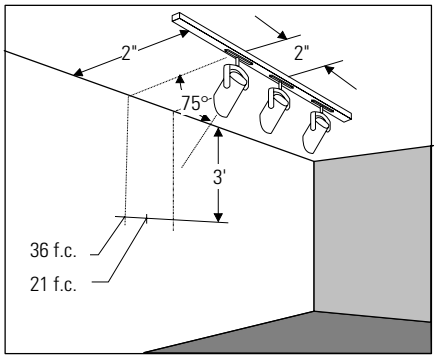

EXAMPLE: With track located 2' from wall and multiple units spaced 2' on center and aimed 75° from horizontal, the illumination on wall 3' from ceiling will be 36 f.c. beneath units and 21 f.c. between units.

Multiple Units 75W PAR 30 FL

Track 2' from Wall-- 2' and 3' On Center

Track Dist. from Wall 2'; 75°; 7"; 3'

Distance From Ceiling in Feet							
1'	14	8	15	1'	12	4	12
2'	28	13	28	2'	18	7	18
3'	36	21	36	3'	31	12	31
4'	31	21	31	4'	25	12	25
5'	28	14	28	5'	16	9	16
6'	13	9	13	6'	11	7	11
7'	9	7	9	7'	7	5	7
8'	7	5	7	8'	5	3	5
9'	5	4	5	9'	4	3	4

Track 3' from Wall-- 3' and 4' On Center

Track Dist. from Wall 3'; 60°; 3'; 4'

Distance From Ceiling in Feet							
1'	8	4	8	1'	7	2	7
2'	19	18	19	2'	18	6	18
3'	36	17	37	3'	34	11	34
4'	38	15	38	4'	27	18	27
5'	18	18	18	5'	16	7	16
6'	11	7	11	6'	18	5	18
7'	7	5	7	7'	6	3	6
8'	4	3	4	8'	4	2	4
9'	3	2	3	9'	2	2	2

Footcandles are average and rounded off and are based on a minimum of five units.
For 50W PAR 30 FL, multiply footcandles by 0.55.

Job Information **Type:**

Lightolier a Genlyte Thomas Company www.lightolier.com
631 Airport Road, Fall River, MA 02720 • (508) 679-8131 • Fax (508) 674-4710
We reserve the right to change details of design, materials and finish.
© 2002 Genlyte Thomas Group LLC (Lightolier Division) • A0902

LIGHTOLIER®