OM6150T6CMHRADJ45

6" T6 CMH Adjustable Downlight

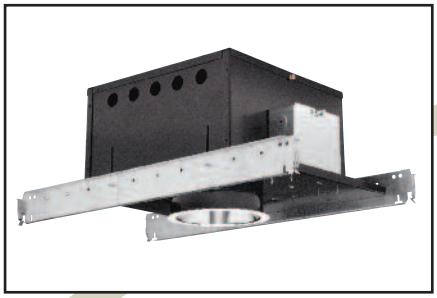

CAT. NO:

TYPE:

PROJECT:

PRODUCT INFORMATION

Applications

Recessed 45° adjustable downlight well suited for general or accent lighting and sloped ceiling applications, auditoriums, schools, churches, resturants, hotels, and offices. Full horizontal rotation makes this fixture ideal for hightlighting store displays, sculpture or vertical sufaces. Low brightness reflector matches all other 6 inch aperature downlights from Omega.

Specifications

1. **Housing** - 20 gauge steel housing with matte black powder coat finish. Accomodates ceilings up to 1-3/8" thick.

2. **Ballast** - Electronic high power factor, with <15% THD. Includes internal ignitor, and thermal protection. Ballast requires a minimum starting temperature of 5°F.

3. **Installation** - Housing features, pre-installed c-channels with vertical and horizontal adjustments. Ballast, junction box and c-channels are accessible from below ceiling. For 27" flat bar hanger pair, specify Q1031 accessory, ordered separately.

4. **Optics** - 2-piece precision formed aluminum upper and lower reflector. Upper reflector is faceted and anodized for optimum performance. Lower reflector has propreitary Alzak finish for a soft appearance and excellent color. Standard flange finish is white paint. For optional polished flange matching interior reflector finsh add "FF" suffix. A protective shatter guard is included for lamp containment.

5. **Aimming** - Die-cast aluminum gearing provides simple tilt adjustment. Full rotation of 362° prevents dead spots in aimming. Positive tilt and rotation locking for stability during relamping and over the life of the product.

6. **Socket** - Porclein G12 bi-pin base.

7. **Top Relamping** - Lamp and ballast are serviceable from above or below the ceiling.

8. **Lamp** - Lamps included.

9. **U.L. Listed** - For use in damp locations and approved for through branch circuit Wiring. I.B.E.W. union made.

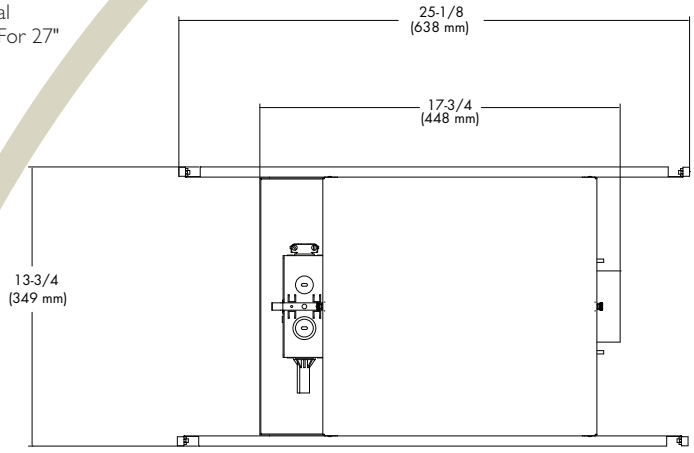

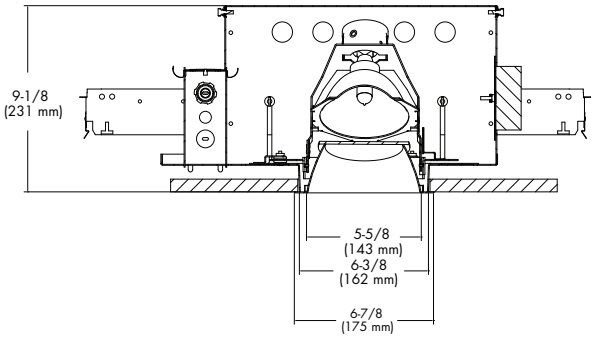

Canadian Specifications may vary from these shown, consult Canadian Division.

6

CATALOG SYSTEM AND OPTIONS

EXAMPLE OF COMPLETE CATALOG NUMBER: OM6150T6CMHMDRADJ45-CS-LP942-EU

OMEGA Aptr.	Lamp (included)	Lamp Type	Distribution	Product Family	Reflector Finish	Lamp (required)	Supply Voltage	Options
OM6	150 T6 70 T6 39 T6	CMH Ceramic Metal Halide	ND Narrow MD Medium WD Wide	RADJ45 Recessed Adjustable (45° tilt)	CS Clear Specular CSS Clear Semi-Specular HZ Haze GS Gold Specular WT Wheat PW Pewter BZ Bronze BK Black WH White FF Finish Flange (As suffix to color)	LP830 LP842[1] LP9302 LP942	EU Electronic 120/277	FZ120 Fusing FZ277 Fusing

FOOTNOTES:
1. 39 watt only.
2. 39 watt - 70 watt only.

Philips Mastercolor Elite lamps standard for LP930.

made with pride in the United States of America

FIVE YEAR Warranty

PHILIPS OMEGA
776 South Green St., Tupelo, MS 38804
Phone 662.842.7212 FAX 662.841.5501
www.omegalighting.com

PHILIPS DAY-BRITE CANADA
189 Bullock Drive, Markham, Ontario, Canada L3P 1W4
Phone 905.294.9570 FAX 800.268.0003
www.day-britecanada.com

PHILIPS omega

OM670T6MHND-RADJ45-CS-EU

Report number: 28063
Lamp: (1) 70WMH
Total Fixture Lumens: 2328
IES file: 28063.IES
Beam Angle: 43.58

DISTRIBUTION CURVE

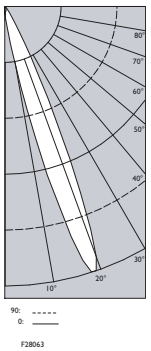

DEGREES	CANDELA AT 0°	CANDELA AT 90°	FOOT-LAMBERTS
90	1	3	
85	0	3	275
75	1	3	108
65	2	4	104
55	6	4	133
45	35	10	509
35	739	76	
25	11084	348	
15	22300	789	
5	2684	1137	
0	1594	1594	

COEFFICIENTS OF UTILIZATION ZONAL CAVITY METHOD

Effective Floor Cavity Reflectance 0.20

RC	80		70		50	
RW	50	30	50	30	50	30
0	38	38	38	38	36	36
1	35	35	34	34	35	34
2	34	33	32	30	34	33
3	33	32	29	28	33	30
4	32	29	28	27	30	29
5	30	28	27	25	29	28
6	28	27	25	23	28	27
7	28	25	23	23	28	25
8	27	23	23	20	27	23
9	26	23	20	20	25	23
10	25	22	20	19	23	22

OM670T6MHMD-RADJ45-CS-EU

Report number: 28060
Lamp: (1)70WMH
Total Fixture Lumens: 1881
IES file: 28060.IES
Beam Angle: 40.65

DISTRIBUTION CURVE

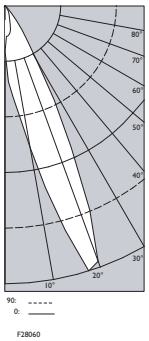

DEGREES	CANDELA AT 0°	CANDELA AT 90°	FOOT-LAMBERTS
90	2	4	
85	0	3	275
75	1	4	139
65	1	4	95
55	9	7	216
45	101	16	1324
35	999	119	
25	5390	627	
15	8287	1356	
5	4271	2084	
0	3136	3136	

COEFFICIENTS OF UTILIZATION ZONAL CAVITY METHOD

Effective Floor Cavity Reflectance 0.20

RC	80		70		50	
RW	50	30	50	30	50	30
0	30	30	30	30	29	29
1	28	28	28	28	28	28
2	28	27	26	25	28	27
3	27	26	23	23	27	25
4	26	23	23	22	25	23
5	25	23	22	20	23	23
6	23	22	20	20	23	22
7	23	20	19	17	23	20
8	22	20	17	17	22	20
9	20	19	17	17	20	19
10	20	17	17	16	20	17

OM670T6MHWD-RADJ45-CS-EU

Report number: 28056
Lamp: (1)70WMH
Total Fixture Lumens: 3550
IES file: 28056.ies
Beam Angle: 51.75

DISTRIBUTION CURVE

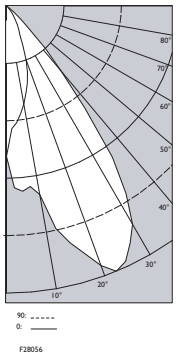

DEGREES	CANDELA AT 0°	CANDELA AT 90°	FOOT-LAMBERTS
90	1	9	
85	0	9	826
75	1	9	309
65	1	10	208
55	19	12	425
45	454	53	5730
35	2780	370	
25	4339	940	
15	4534	2408	
5	4547	3507	
0	4505	4505	

COEFFICIENTS OF UTILIZATION ZONAL CAVITY METHOD

Effective Floor Cavity Reflectance 0.20

RC	80		70		50	
RW	50	30	50	30	50	30
0	57	57	57	57	56	56
1	55	54	53	52	54	53
2	53	50	48	46	52	50
3	50	46	45	42	48	46
4	47	44	41	40	46	44
5	46	41	39	36	45	40
6	42	39	36	34	42	39
7	40	36	34	32	40	36
8	40	34	32	29	39	34
9	38	33	29	28	36	33
10	35	32	28	27	35	30

PHILIPS omega

PHILIPS OMEGA
776 South Green St., Tupelo, MS 38804
Phone 662.842.7212 FAX 662.841.5501
www.omegalighting.com

PHILIPS DAY-BRITE CANADA
189 Bullock Drive, Markham, Ontario, Canada L3P 1W4
Phone 905.294.9570 FAX 800.268.0003
www.day-britecanada.com